Block Diagram of Baseband Blocks (Version 24 Edit 203) for layout version 24

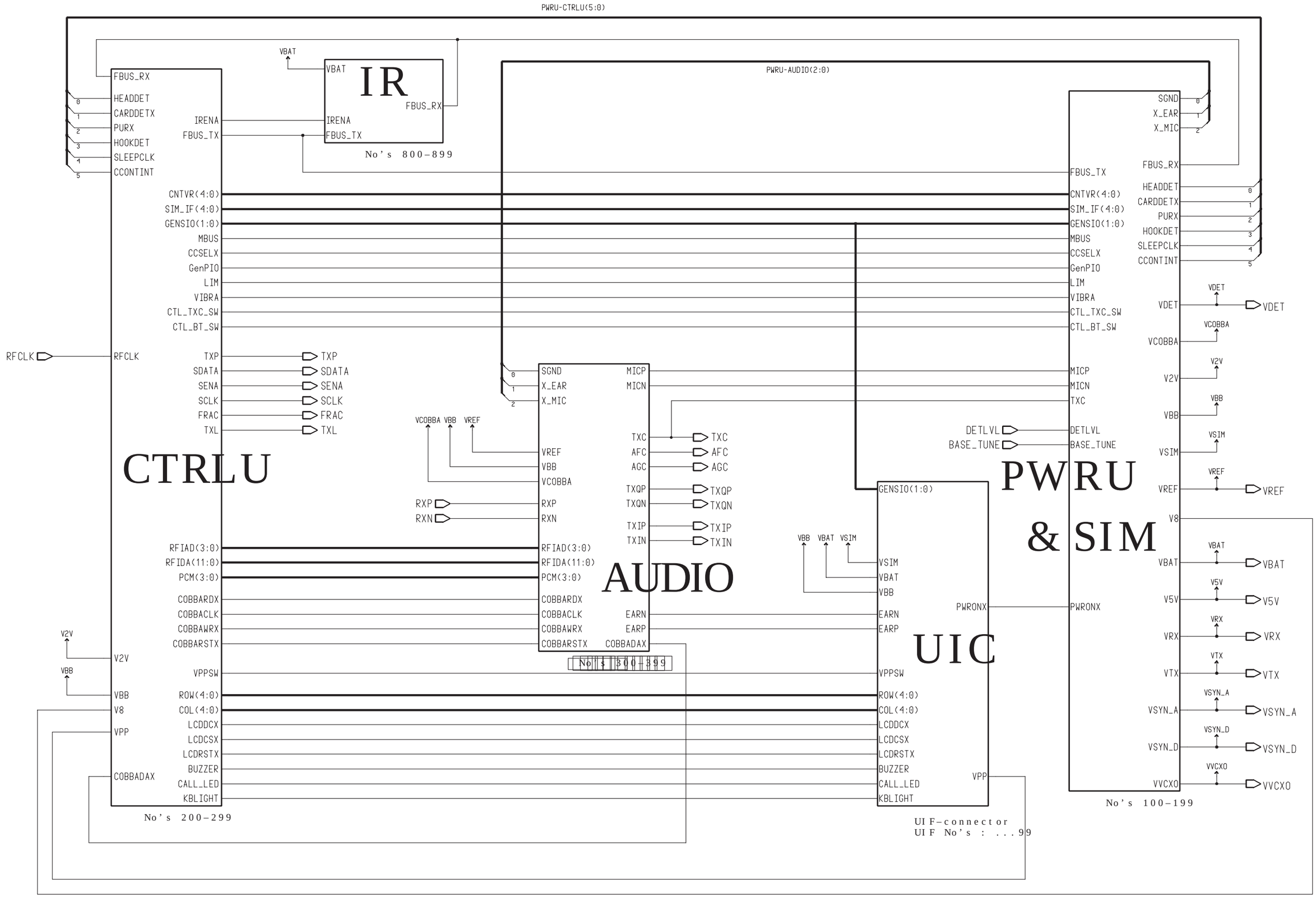

Block Diagram of System/RF Blocks

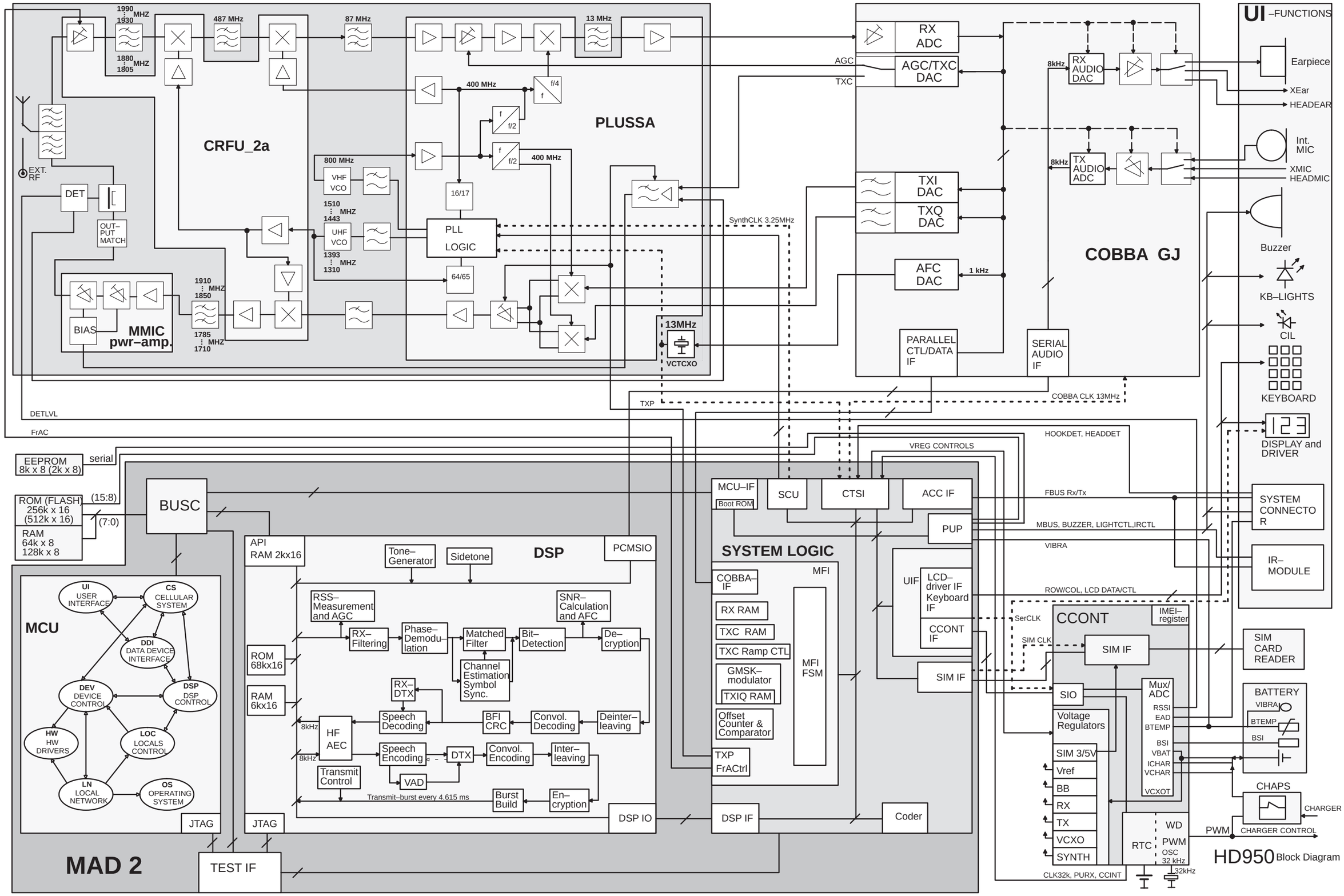

Circuit Diagram of Power Supply (Version 24 Edit 353) for layout version 24

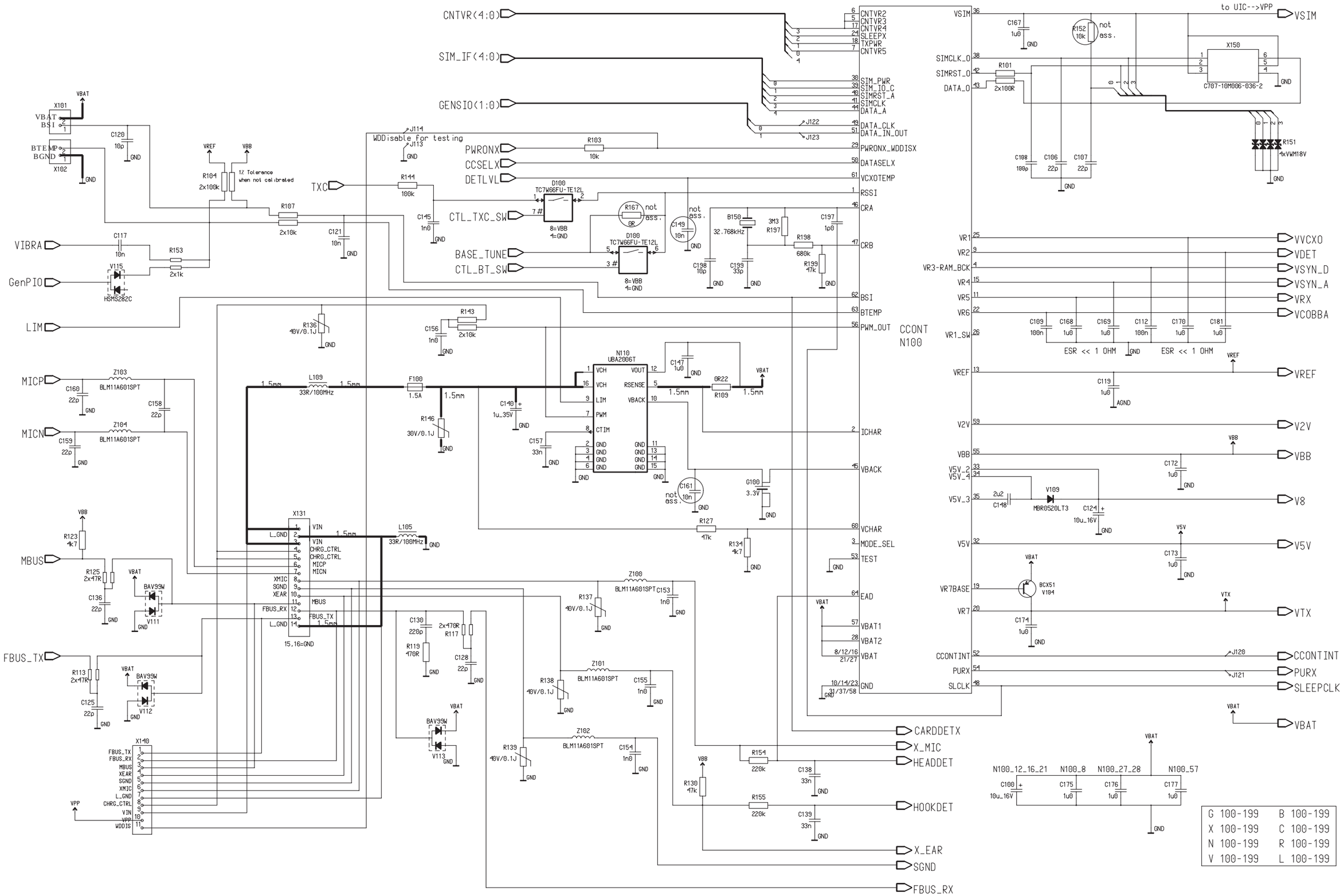

Circuit Diagram of UI Connector (Version 24 Edit 87) for layout version 24

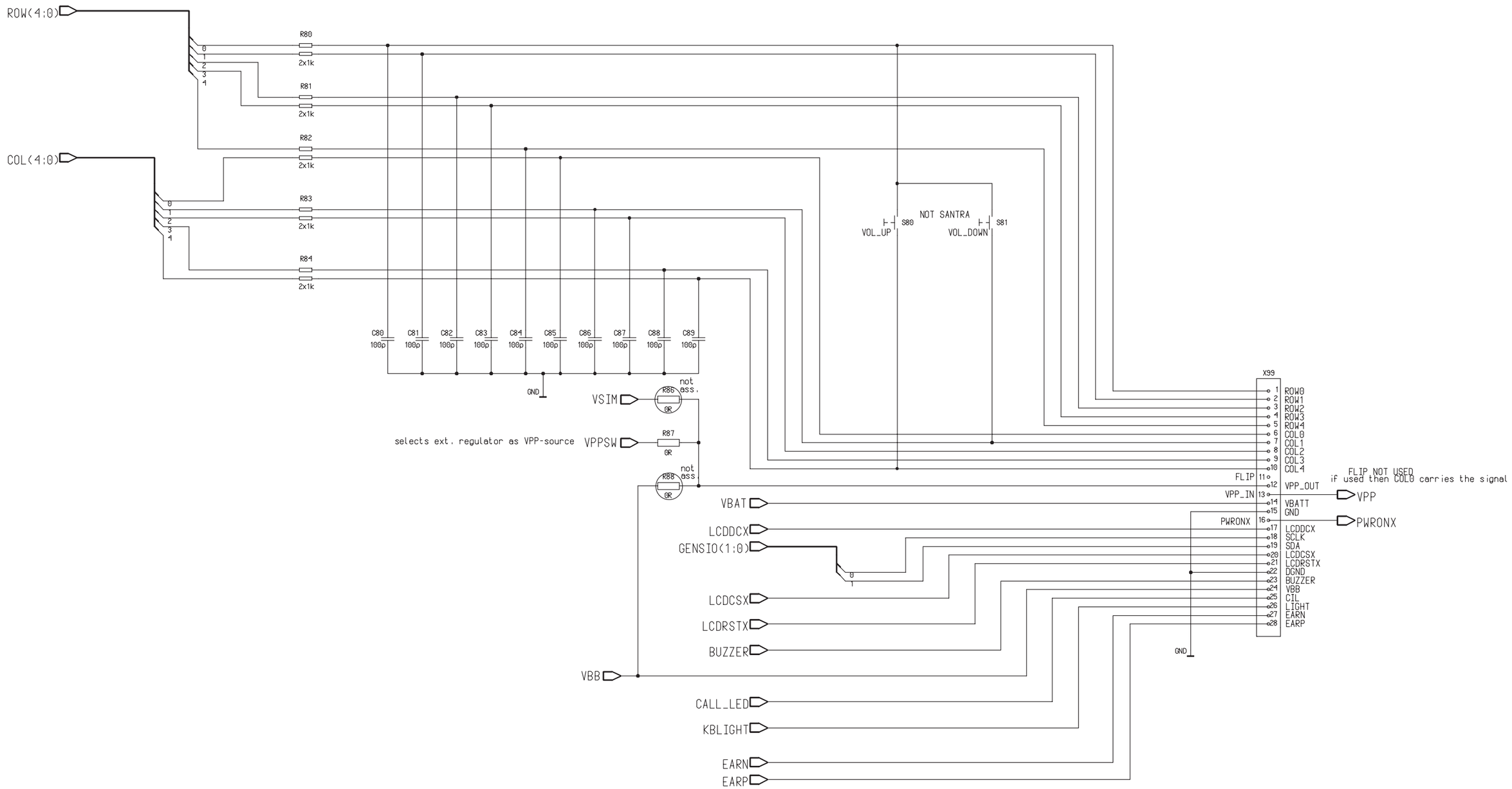

Circuit Diagram of CTRLU Block (Version 24 Edit 233) for layout version 24

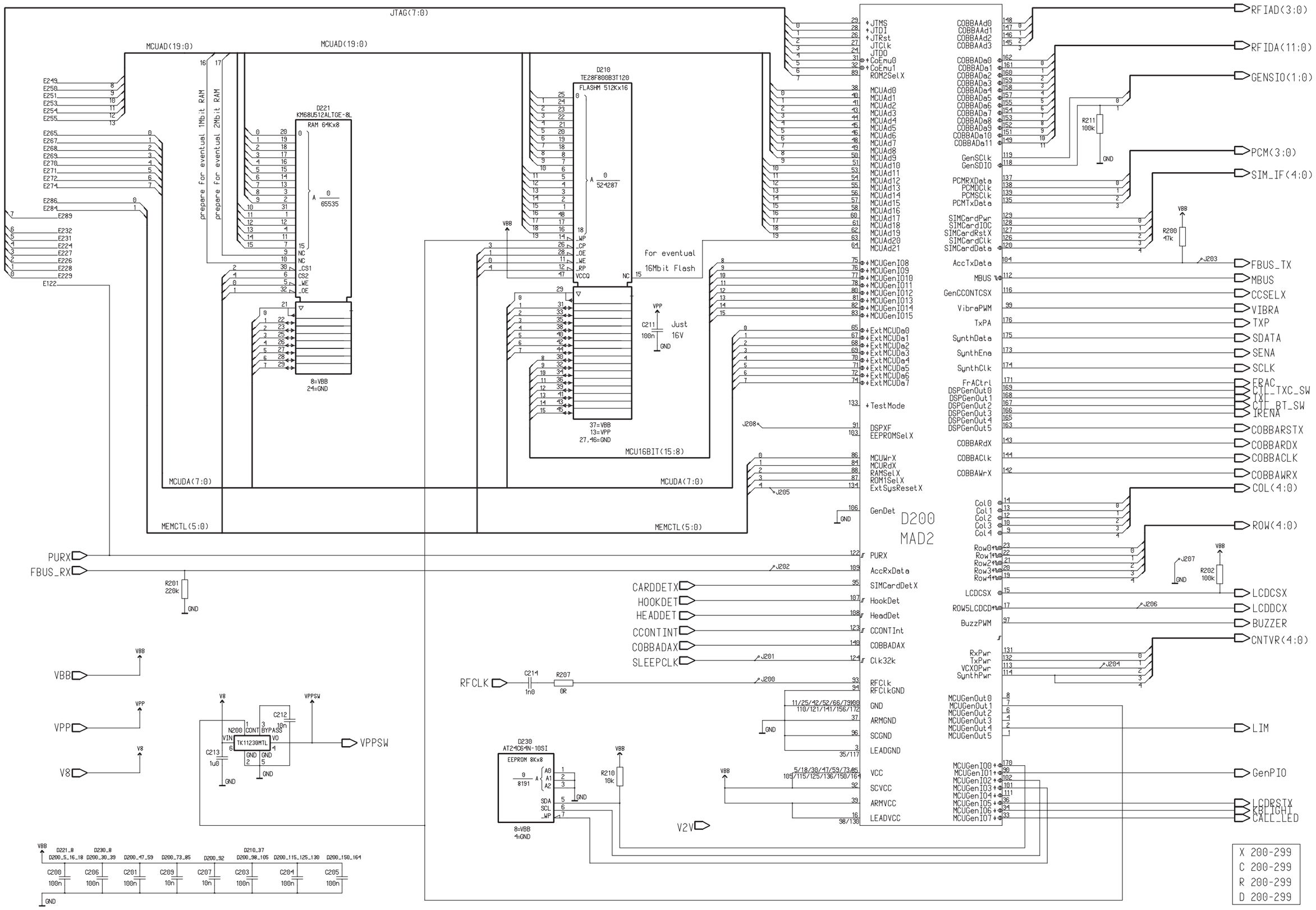

Circuit Diagram of Audio (Version 24 Edit 157) for layout version 24

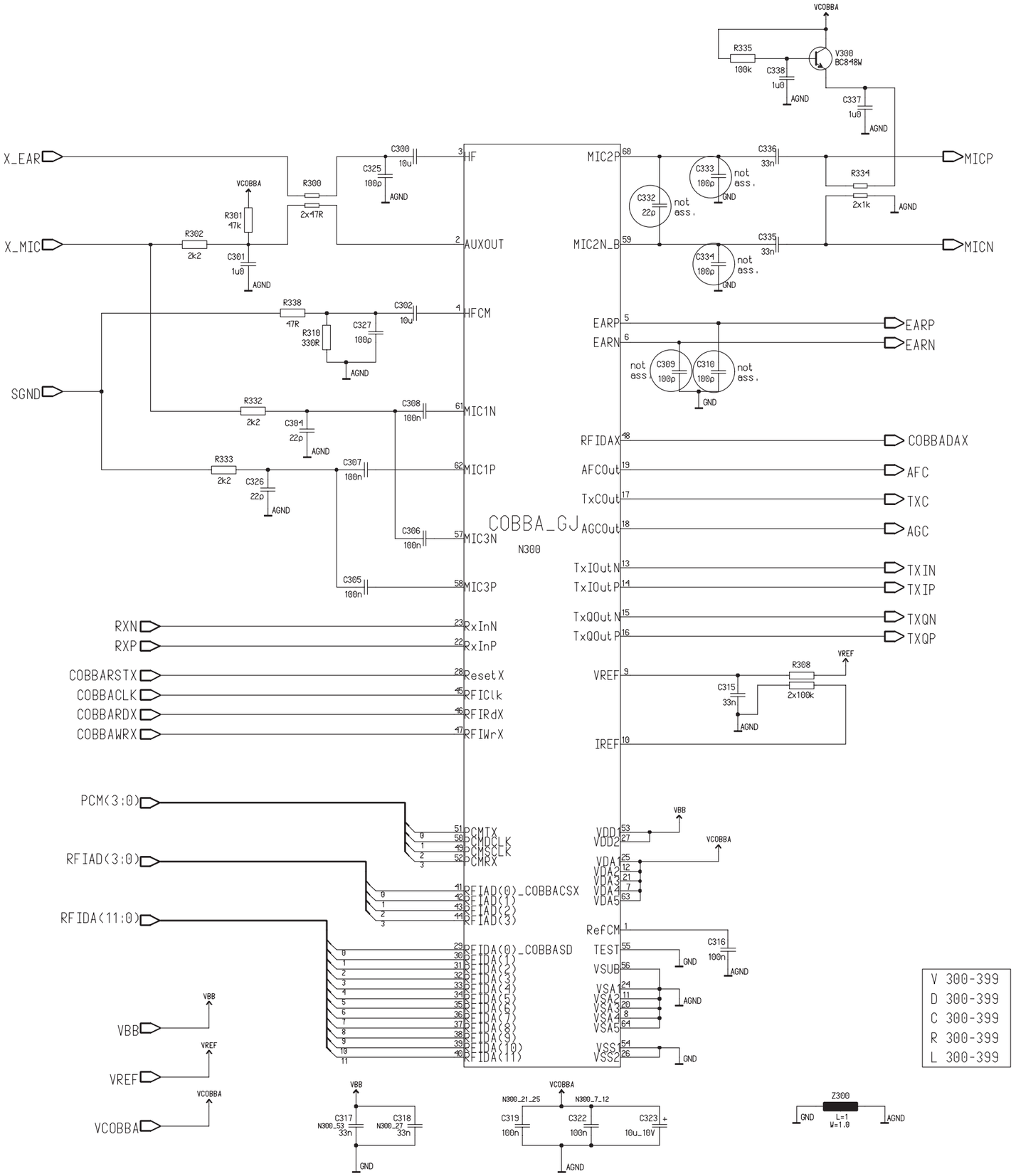

Circuit Diagram of IR Module (Version 24 Edit 88) for layout version 24

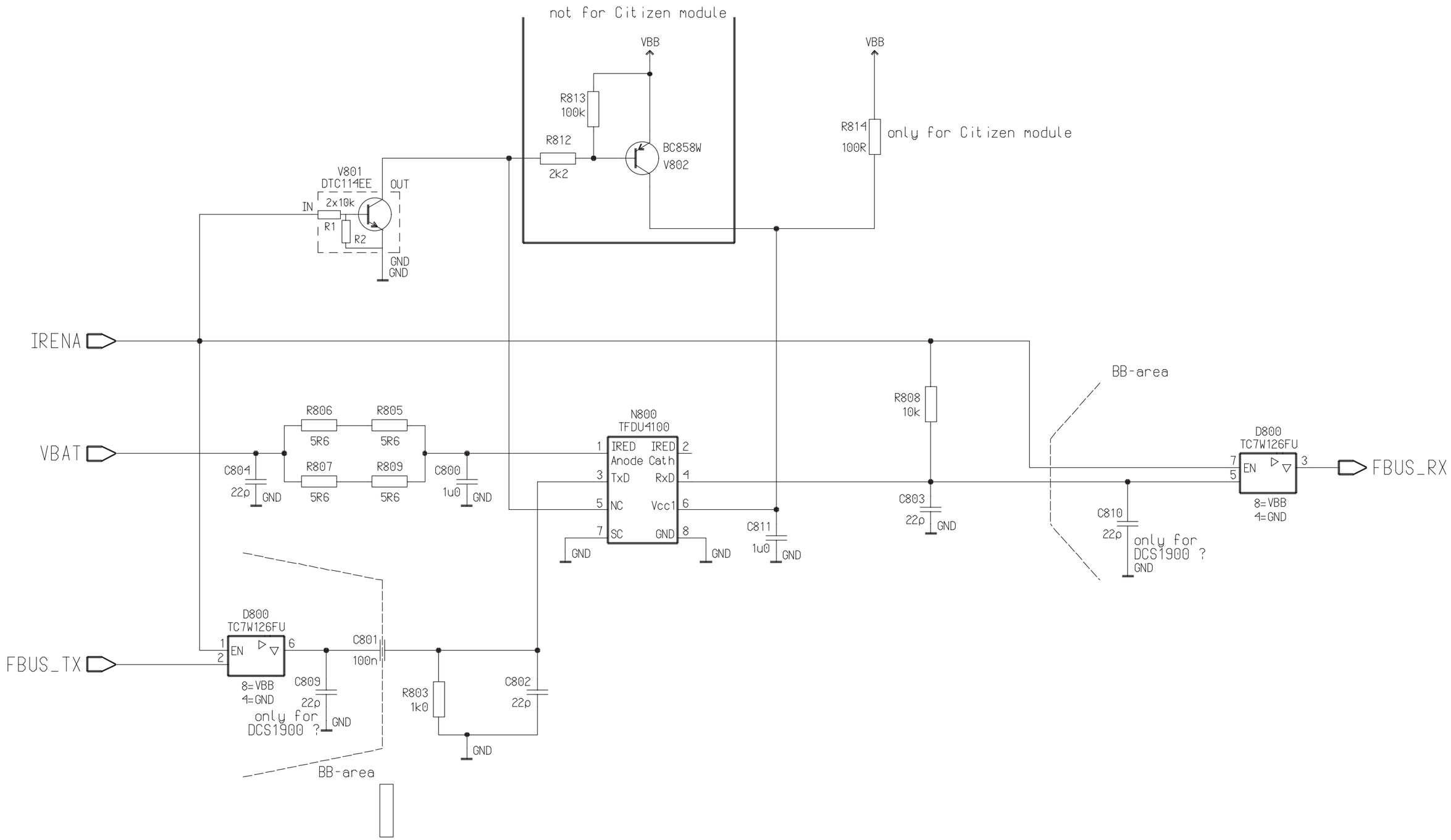

Circuit Diagram of RF–BB Interface (Version 24 Edit 114) for layout version 24

Circuit Diagram of MAD Module

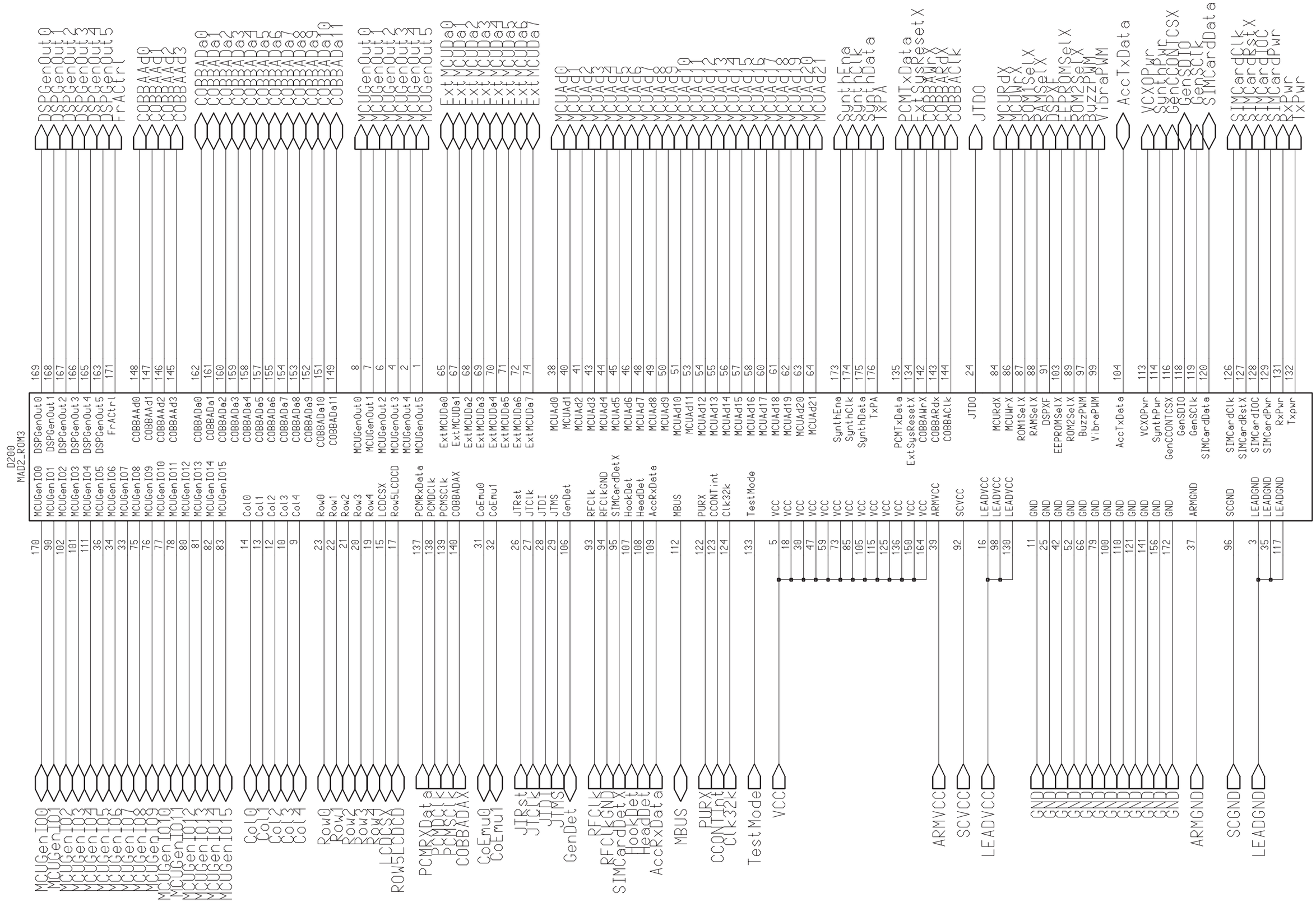

Circuit Diagram of COBBA Module

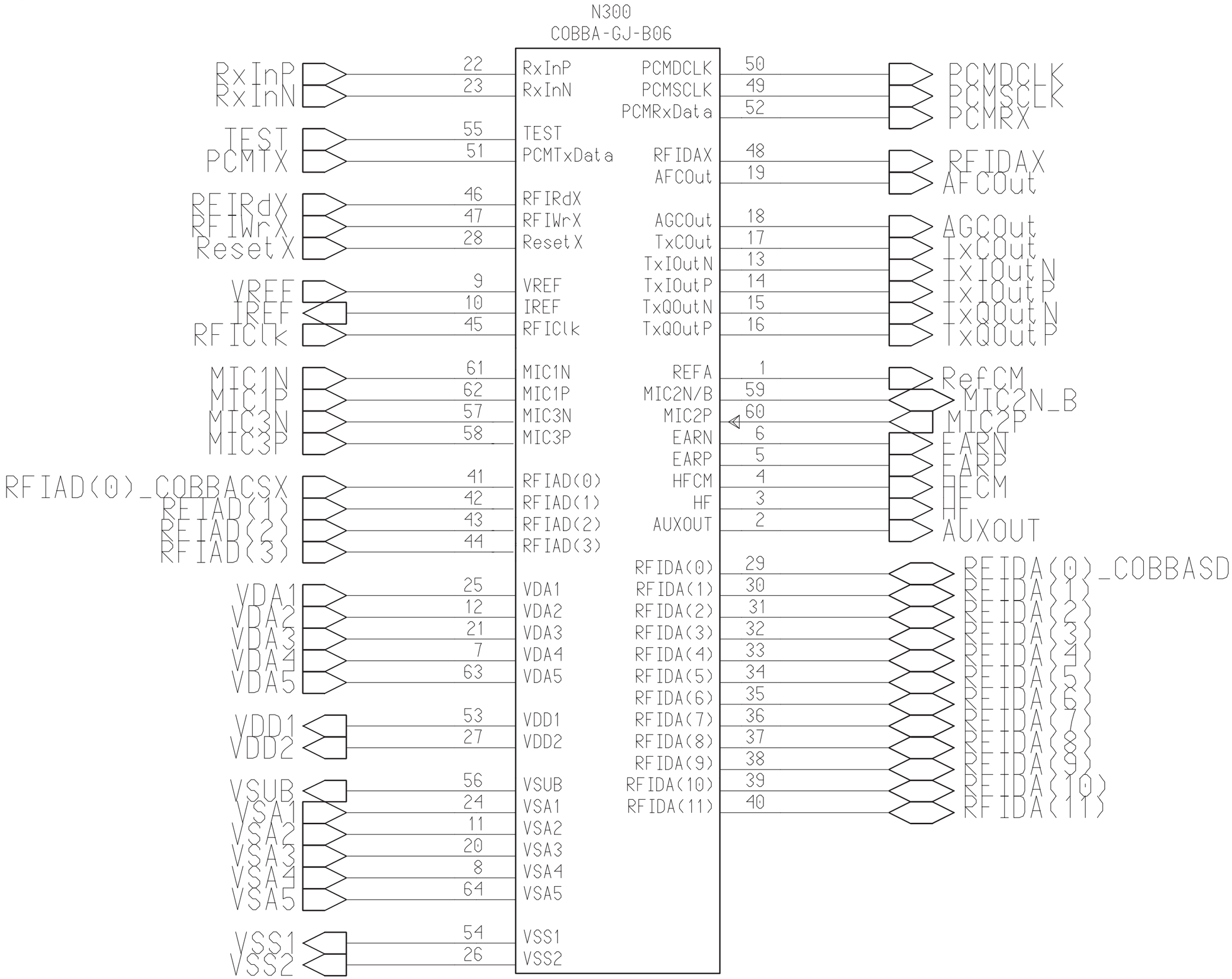

Circuit Diagram of CCO Module

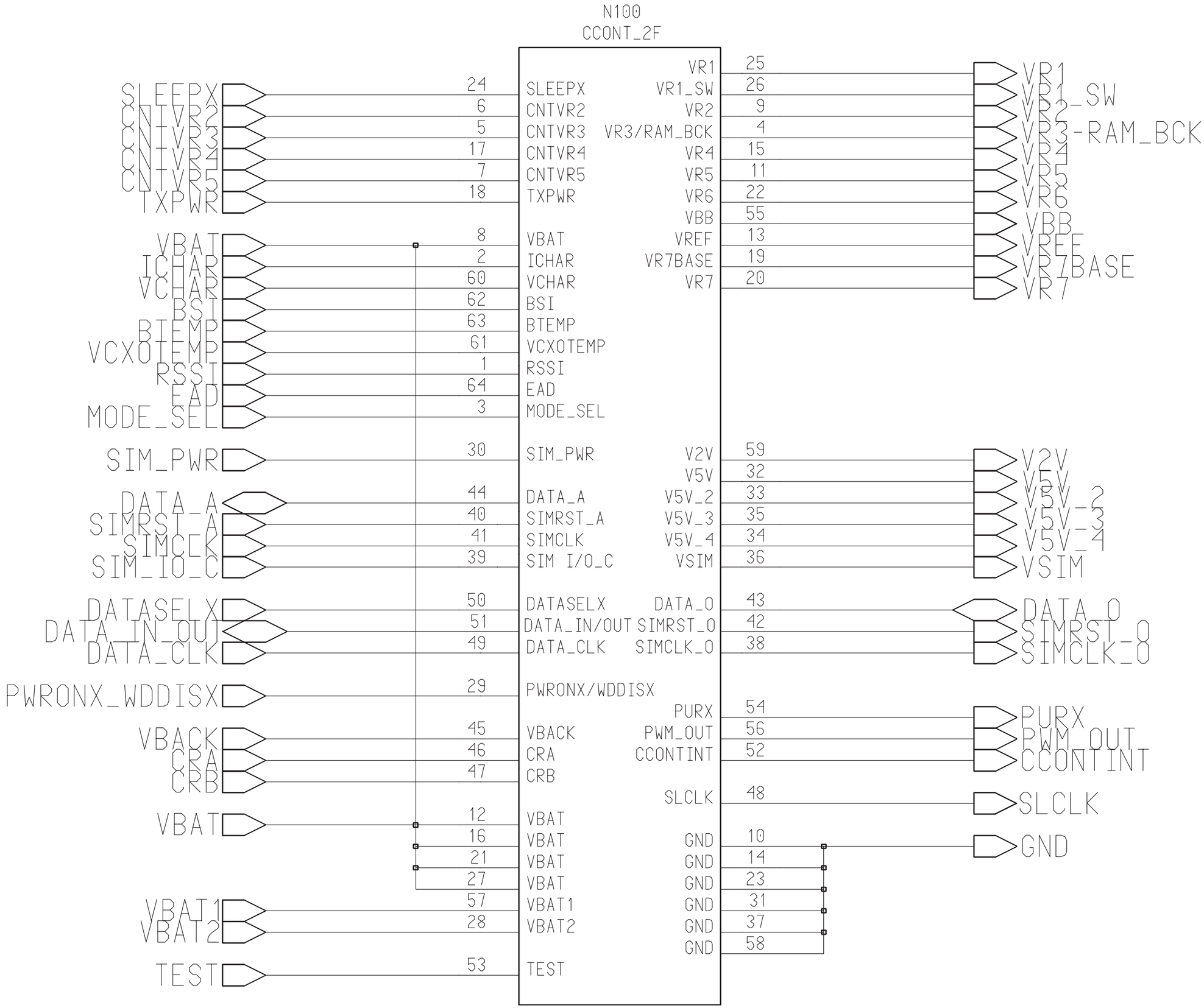

Circuit Diagram of RF Block (Version 24 Edit 469) for layout version 24

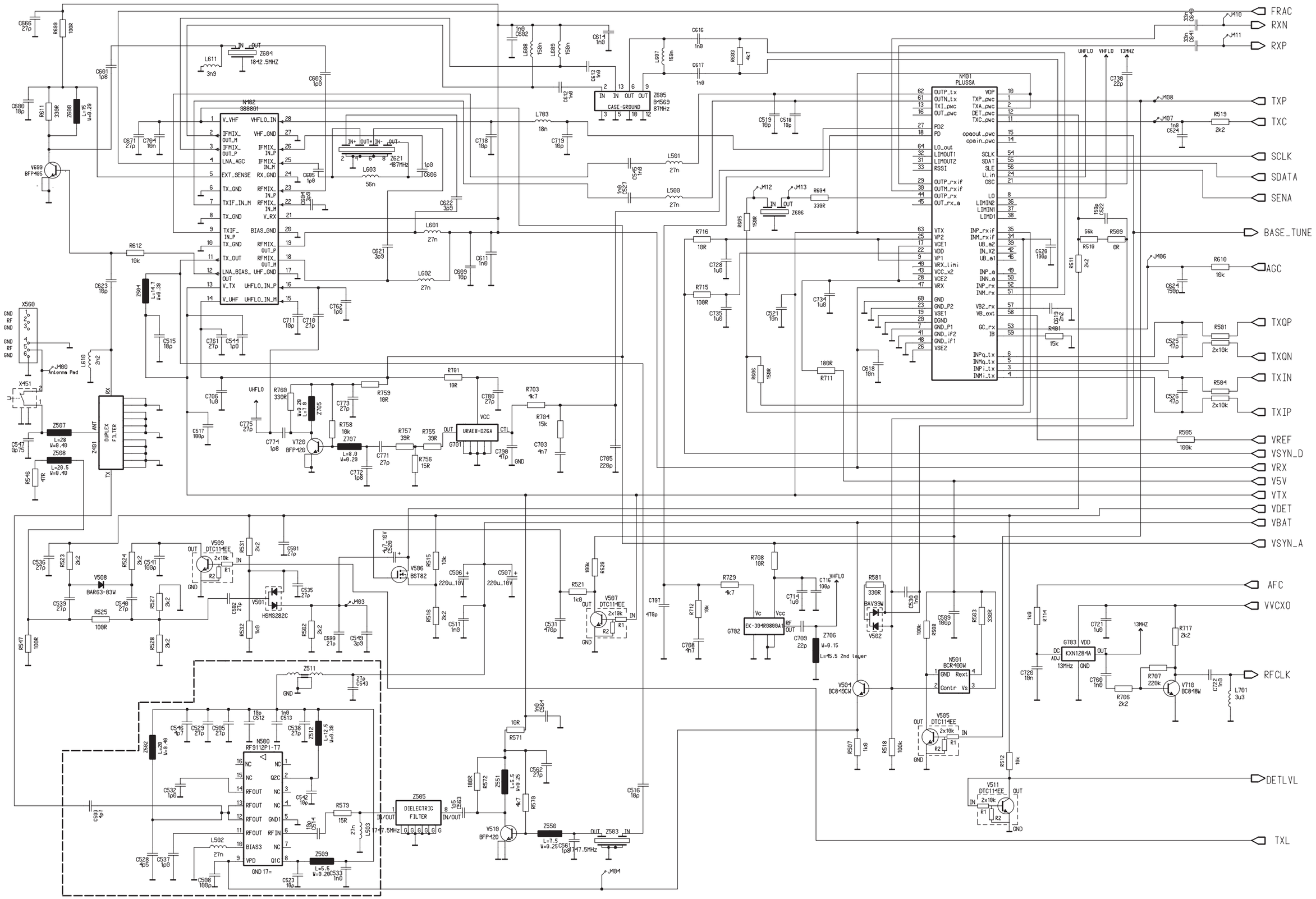

Layout Diagram of UR9U (Layout version 24)

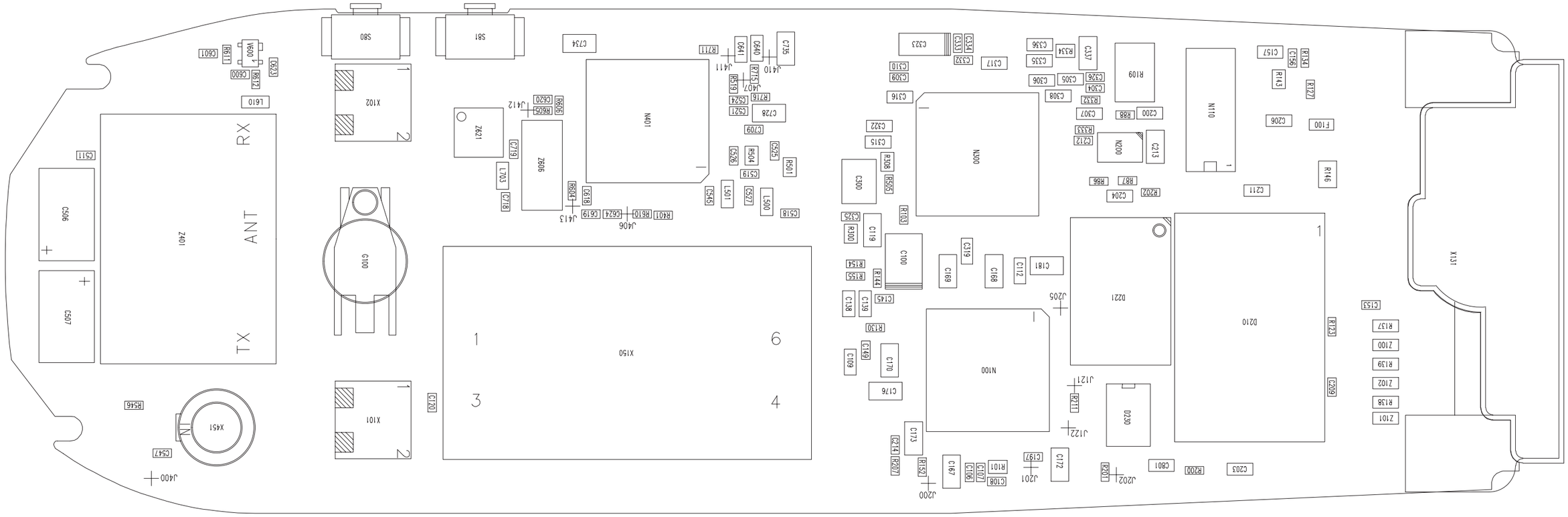

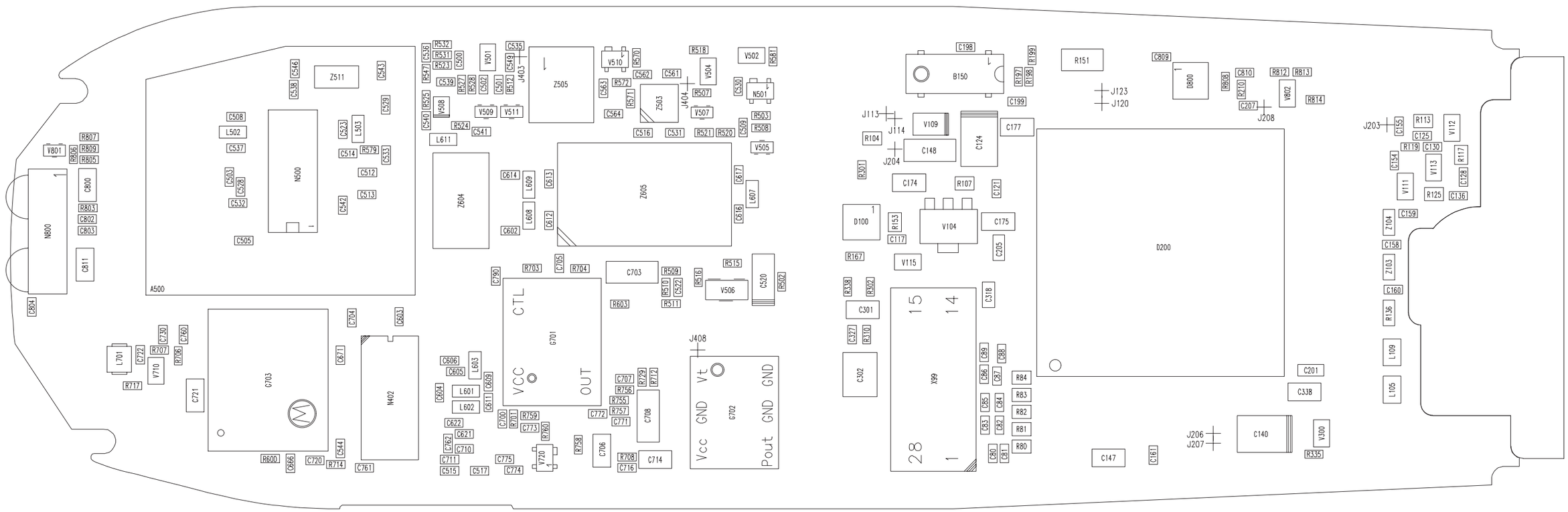

Circuit Diagram of Power Supply (Version 26 Edit 360) for layout version 26

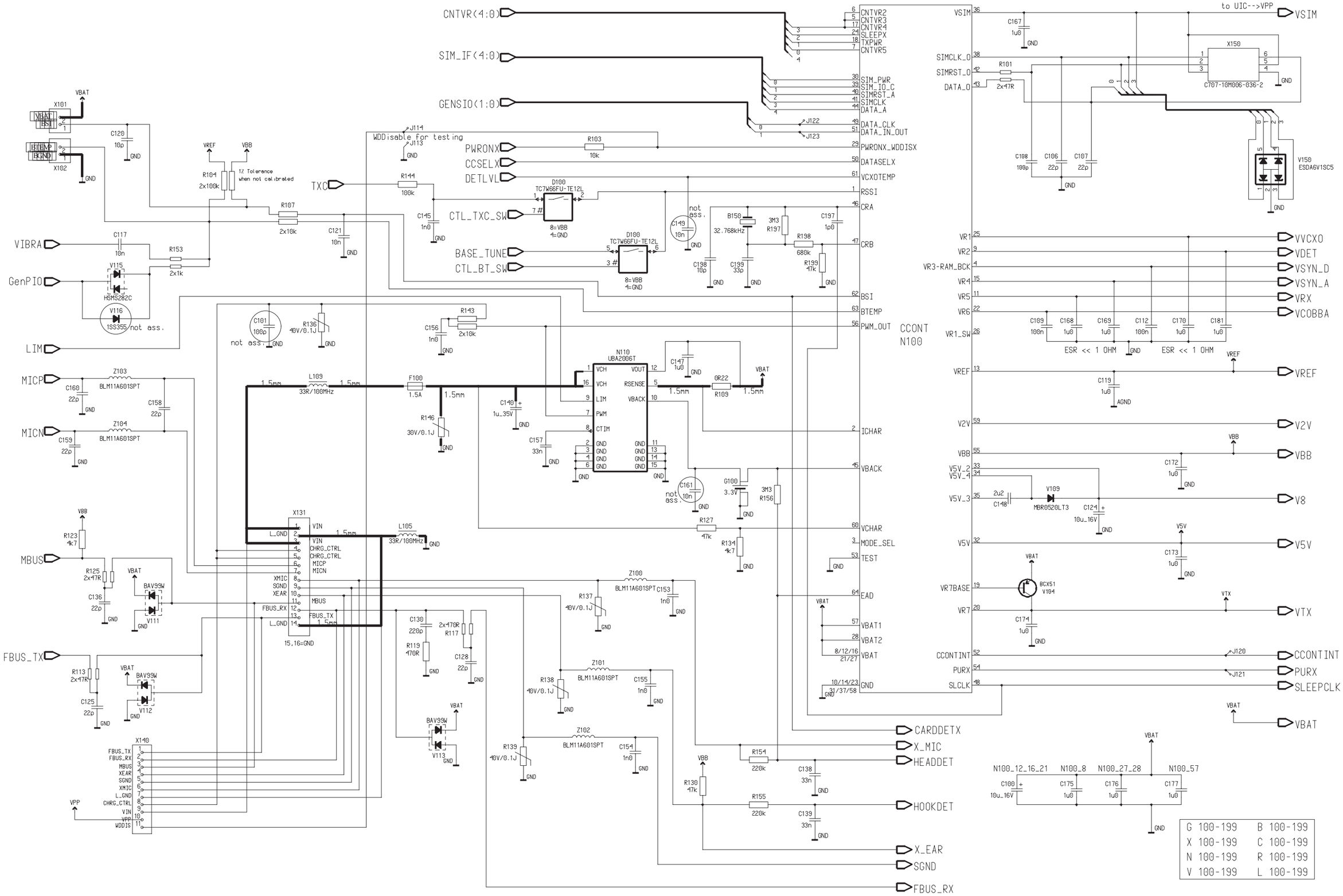

Circuit Diagram of UI Connector (Version 26 Edit 92) for layout version 26

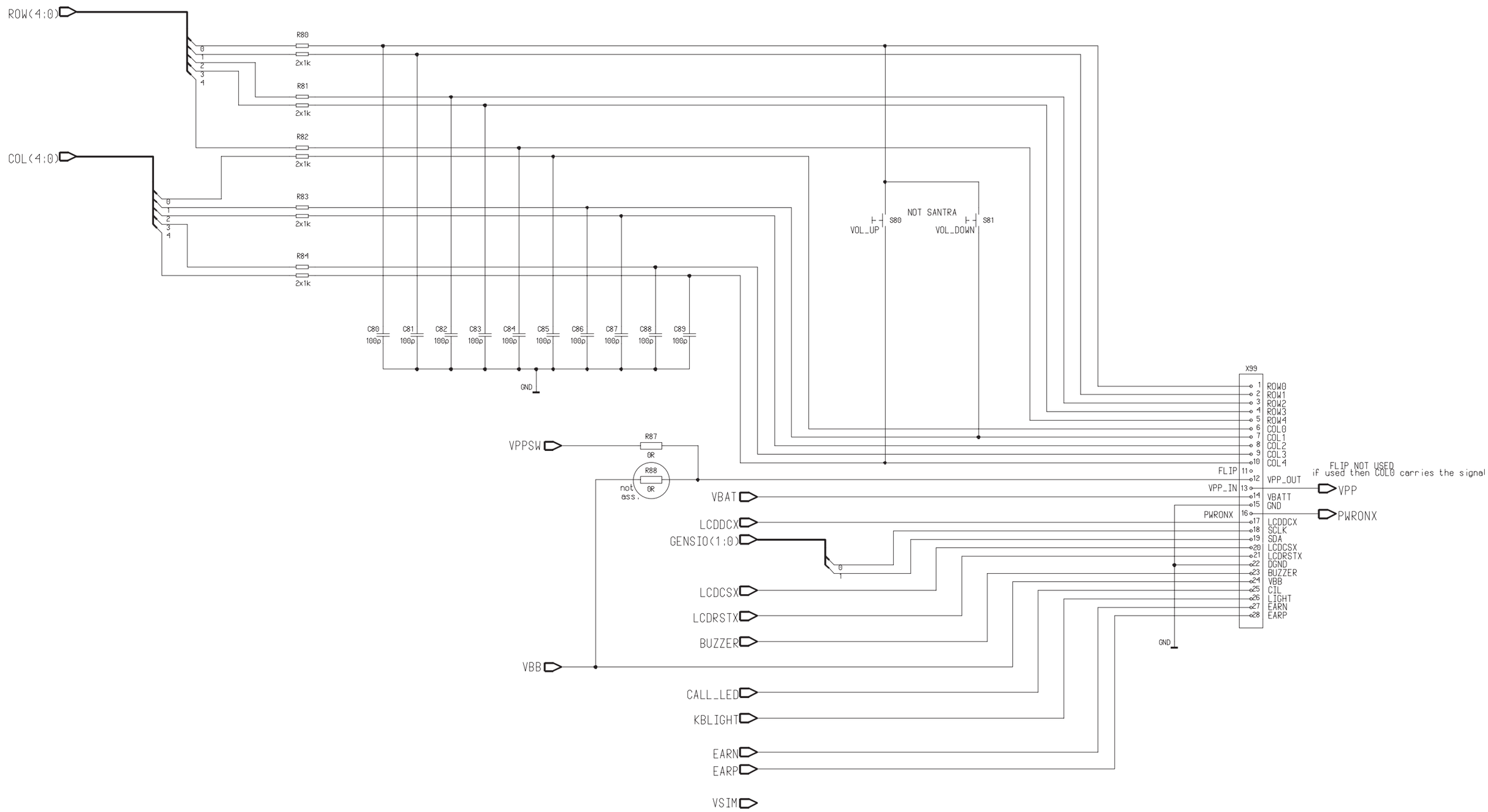

Circuit Diagram of CTRLU Block (Version 26 Edit 241) for layout version 26

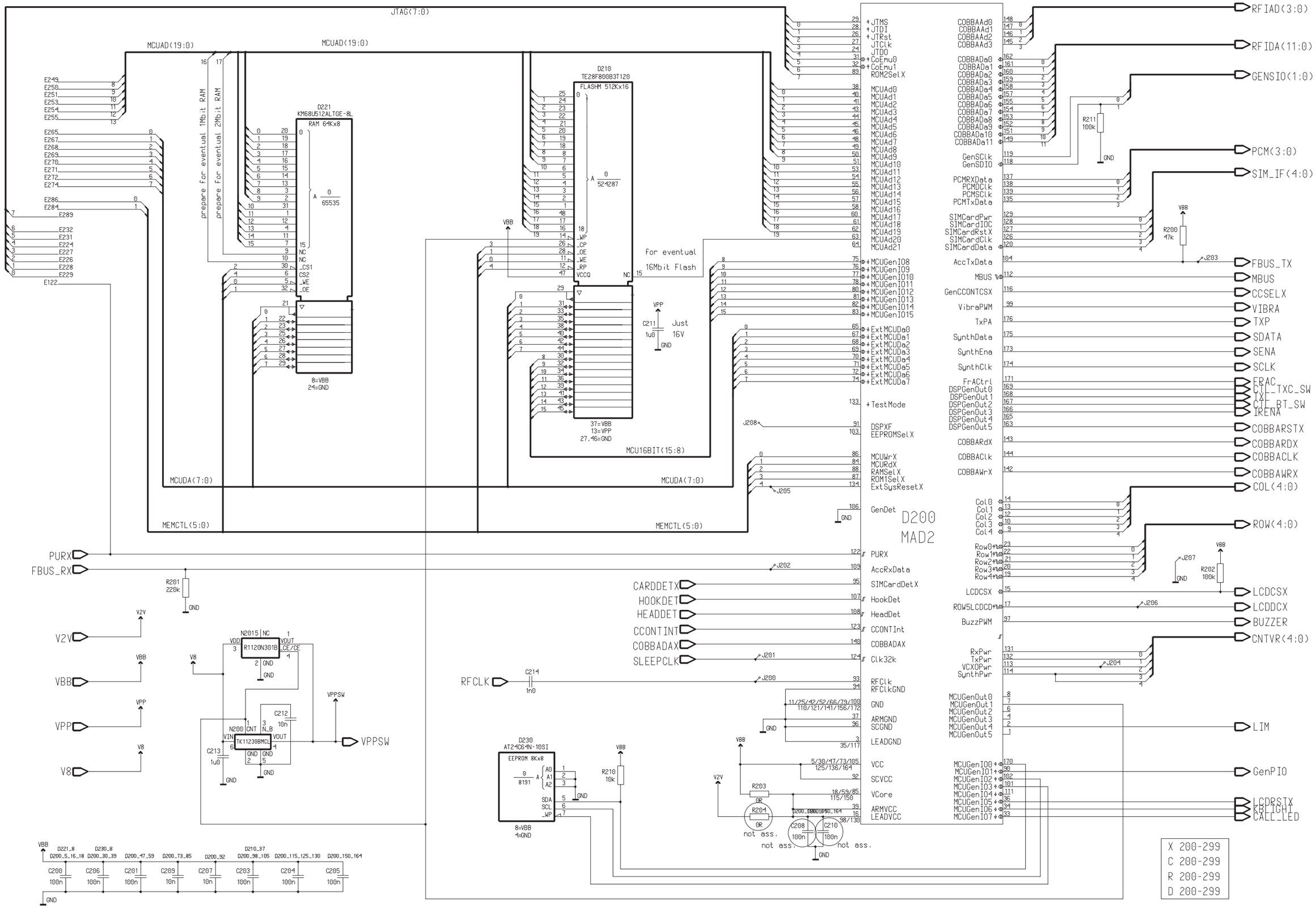

Circuit Diagram of Audio (Version 26 Edit 160) for layout version 26

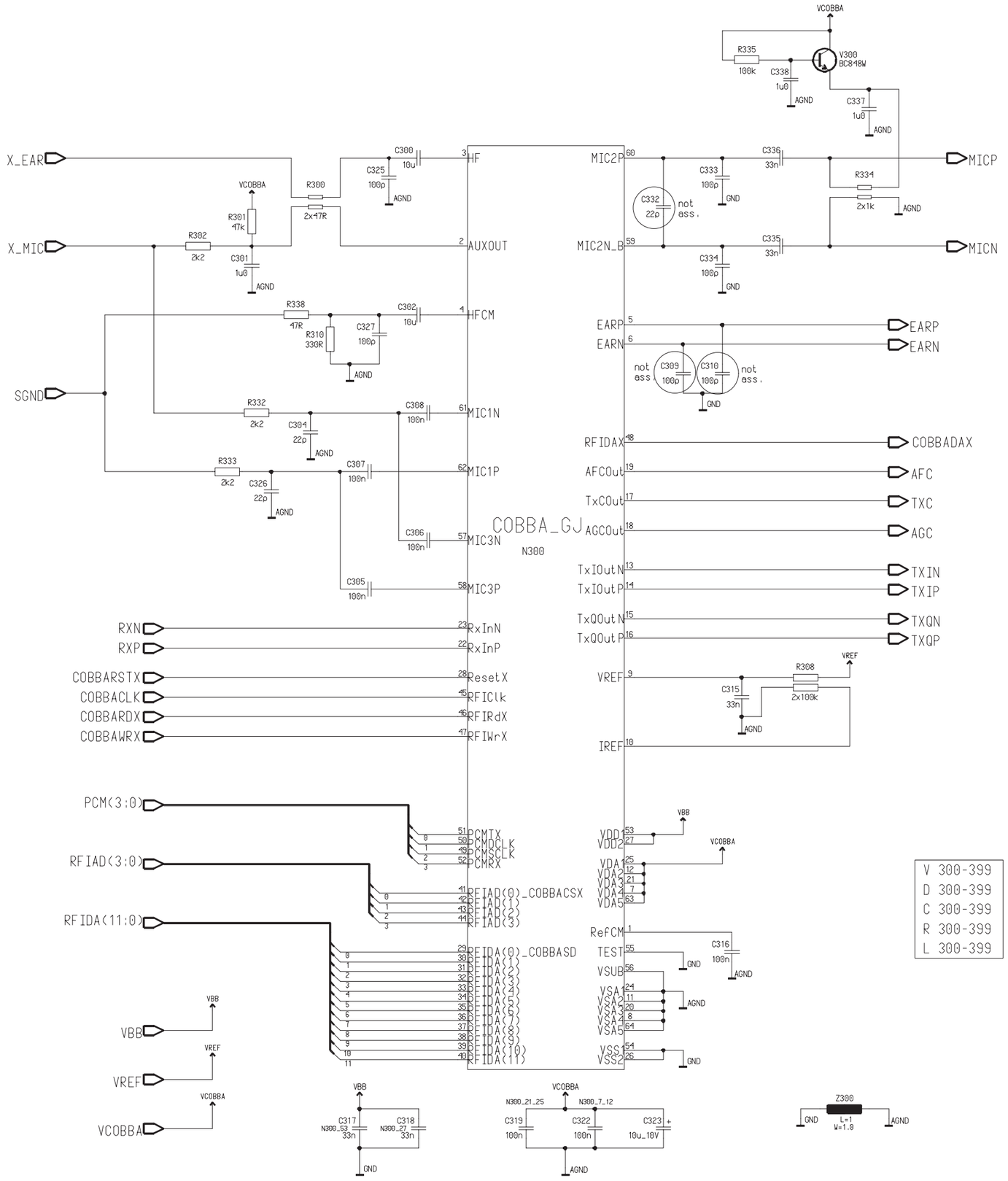

Circuit Diagram of IR Module (Version 26 Edit 93) for layout version 26

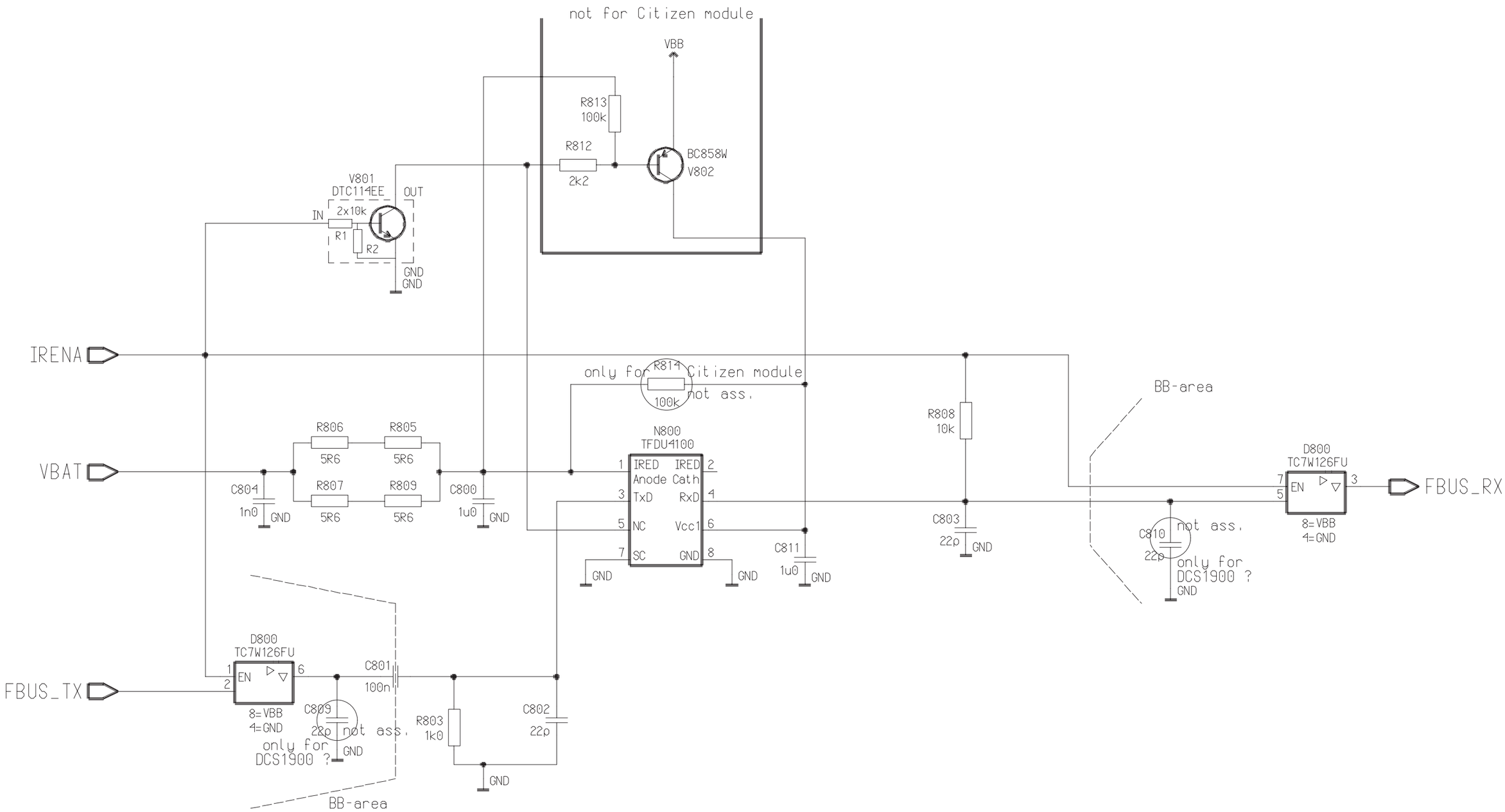

Circuit Diagram of RF–BB Interface (Version 26 Edit 114) for layout version 26

Circuit Diagram of RF Block (Version 26 Edit 482) for layout version 26

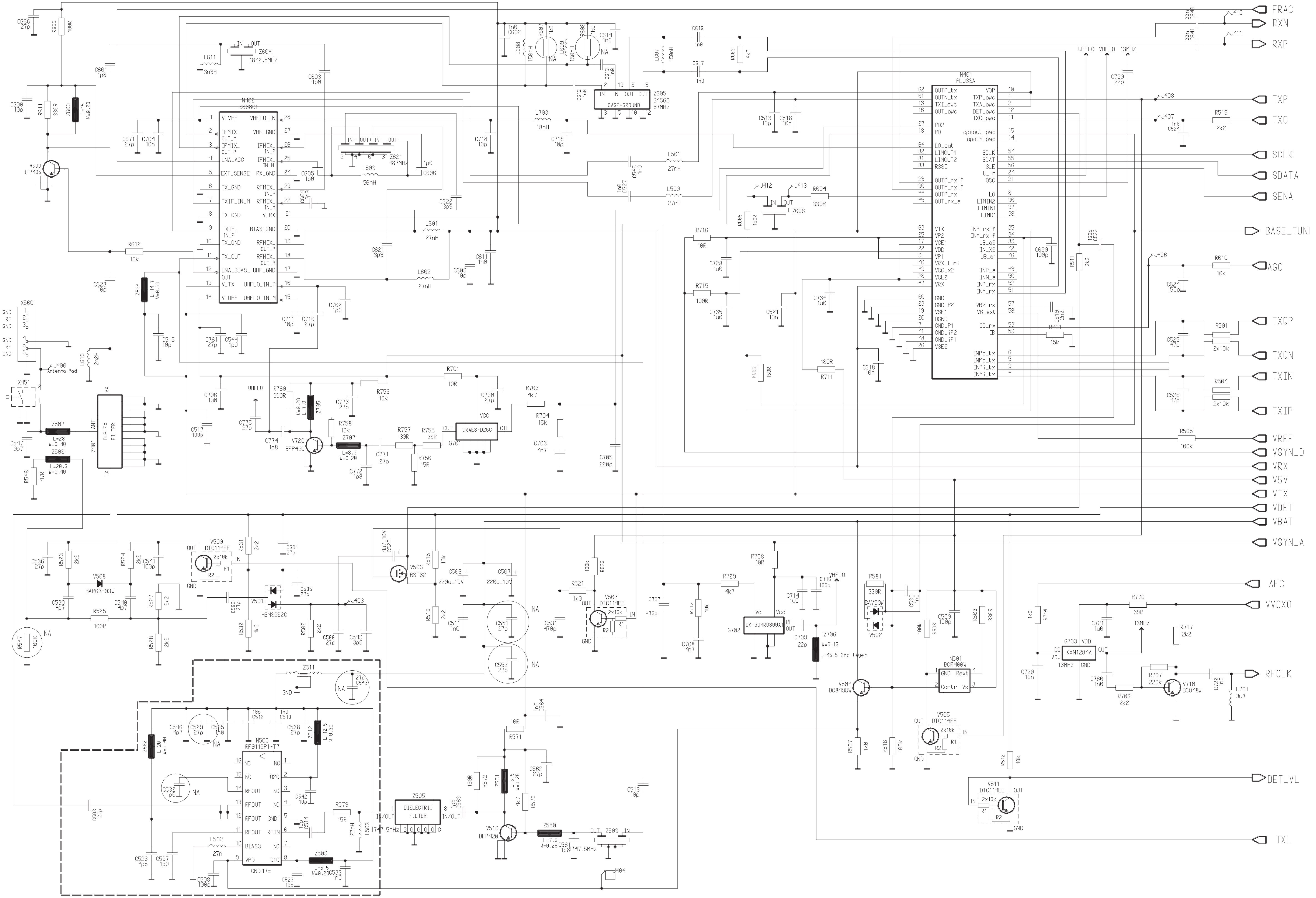

Layout Diagram of UR9U (Layout version 26)

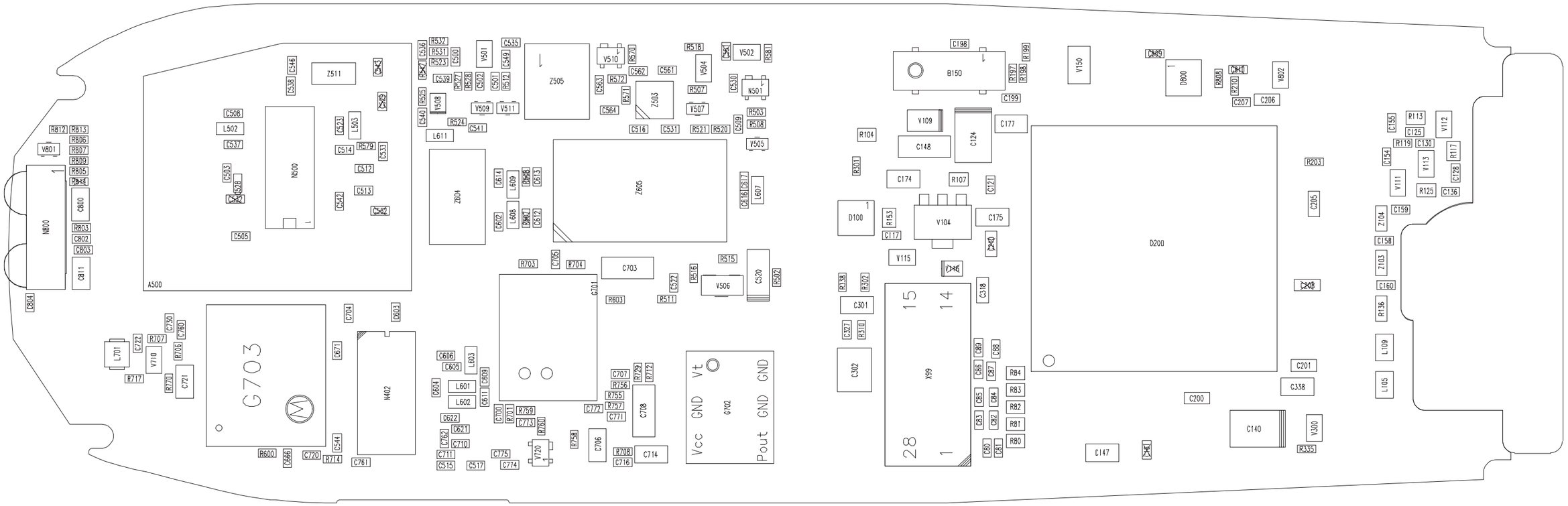
G703
Vcc GND Vt
Pout GND GND
G702
X99
N500
N600
N402
A500
B150
D200
D800
V104
V109
V150
V802
V502
V506
V510
V511
V507
V505
Z505
Z503
Z604
Z605
Z511
L502
L503
L611
L601
L602
L603
L607
L608
L609
L701
V710
V720
C703
C708
C706
C714
C220
C124
C177
C148
C174
C175
C318
C301
C302
C200
C201
C338
C140
C147
C205
C206
C207
C159
C160
C136
C128
C125
C130
C119
C100
C109
C170
C176
C173
C167
C172
C137
C317
C323
C325
C300
C315
C322
C316
C211
C213
C214
C221
C210
C209
C203
C801
R109
R146
R143
R127
R137
R139
R138
R136
R135
R130
R144
R145
R154
R155
R156
R101
R108
R107
R104
R153
R117
R119
R113
R125
R203
R335
R300
R301
R302
R310
R338
R80
R81
R82
R83
R84
R717
R770
R714
R600
R761
R759
R758
R755
R756
R757
R771
R772
R793
R708
R716
R715
R711
R501
R504
R519
R524
R541
R515
R516
R511
R603
R703
R704
R502
R503
R508
R507
R518
R572
R571
R579
R521
R520
R531
R532
R523
R539
R527
R528
R525
R540
R542
R536
R533
R512
R514
R579
R803
R813
R812
R806
R807
R809
R805
R801
R804
R802
R601
R612
R611
R610
R623
R646
R647
R620
R605
R606
R618
R619
R624
R610
R401
R402
R601
R604
R608
R607
R210
R198
R197
R199
R608
R335
R334
R333
R332
R331
R212
R202
R204
R187
R200
R201
R101
R108
R107
R106
R105
R109
R110
R111
R112
R113
R117
R119
R125
R127
R134
R135
R136
R137
R138
R139
R143
R146
R154
R155
R156
R203
R300
R301
R302
R310
R338
R80
R81
R82
R83
R84
R717
R770
R714
R600
R761
R759
R758
R755
R756
R757
R771
R772
R793
R708
R716
R715
R711
R501
R504
R519
R524
R541
R515
R516
R511
R603
R703
R704
R502
R503
R508
R507
R518
R572
R571
R579
R521
R520
R531
R532
R523
R539
R527
R528
R525
R540
R542
R536
R533
R512
R514
R579
R803
R813
R812
R806
R807
R809
R805
R801
R804
R802
R601
R612
R611
R610
R623
R646
R647
R620
R605
R606
R618
R619
R624
R610
R401
R402
R601
R604
R608
R607
R210
R198
R197
R199
R608
R335
R334
R333
R332
R331
R212
R202
R204
R187
R200
R201
R101
R108
R107
R106
R105
R109
R110
R111
R112
R113
R117
R119
R125
R127
R134
R135
R136
R137
R138
R139
R143
R146
R154
R155
R156
R203
R300
R301
R302
R310
R338
R80
R81
R82
R83
R84
C534
C533
C532
C535
C549
C501
C502
C500
C539
C527
C528
C526
C525
C524
C523
C522
C521
C520
C519
C518
C517
C516
C515
C514
C513
C512
C511
C510
C509
C508
C507
C506
C505
C504
C503
C502
C501